C1

A certain Op Amp has a unity-gain bandwidth of 15 MHz.
If this Op Amp is used in a noninverting amplifier having a DC gain of 10, what is the 3-dB bandwidth? Repeat for a DC gain of 100.

C2

A certain dominant-pole Op Amp has A_{0OL} = 50,000 and f_{BOL} = 100Hz. Sketch the magnitude Bode plot for A_{OL} to scale.

C3

A certain Op Amp has an open-loop DC gain of 200,000 and a 3-dB bandwidth of 5 Hz.
Find the magnitude and phase of the open-loop gain at a frequency of:

a) 100 Hz
b) 1000 Hz
c) 1 MHz

C4

Consider two alternatives for designing an amplifier having a DC gain of 100:

The first alternative is to use a single noninverting stage with a gain of 100.

The second alternative is to cascade two noninverting stages, each having a gain of 10.

Op Amps with a gain bandwidth product of 10^6 are to be used. Write an expression for the gain as a function of frequency for each alternative.
Find the 3-dB bandwidth for each alternative.

C5

A certain internally compensated (dominant-pole) Op Amp has a DC gain of 200,000 and a 3-dB bandwidth of 5 Hz.
Sketch the Bode plot of the magnitude of the open-loop gain to scale.
If this Op Amp is used in a noninverting amplifier having a closed-loop DC gain of 100, sketch the Bode plot of the magnitude of the closed-loop gain to scale.
Repeat for a closed-loop DC gain of 10.

C6

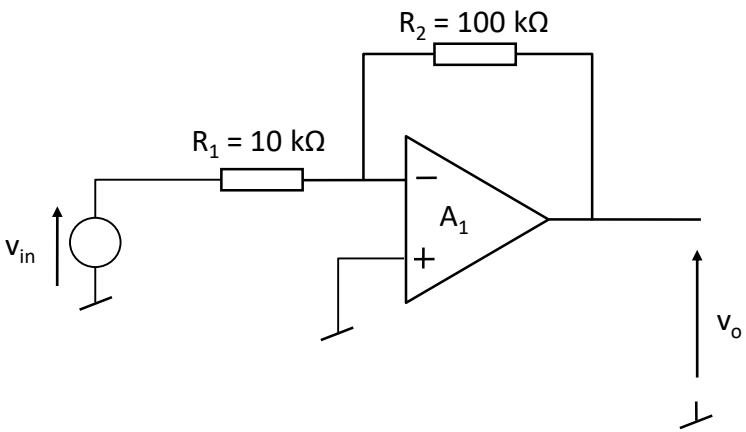

$$v_{in} = 0{,}1 \cdot \sin(2\pi \cdot 5 \cdot 10^3 \cdot t)\ [V]$$

$$A_{OL}(f) = \frac{A_0}{1 + j\frac{f}{f_c}}$$

$$A_0 = A_{OL}(0) = 100\ dB$$

$$f_c = 10\ Hz$$

En inverterende forstærker er opbygget som vist ovenfor. A_1 kan regnes ideel i Sp. 1.

Sp. 1 Bestem amplituden af udgangssignalet v_o.

Sp. 2 Bestem den procentiske fejl der begås i spørgsmål 1, såfremt A_1 kan regnes ideel bortset fra den angivne åbensløjfekarakteristik.

Bemærk at f_c kaldes f_{BOL} i lærebogen.

C7

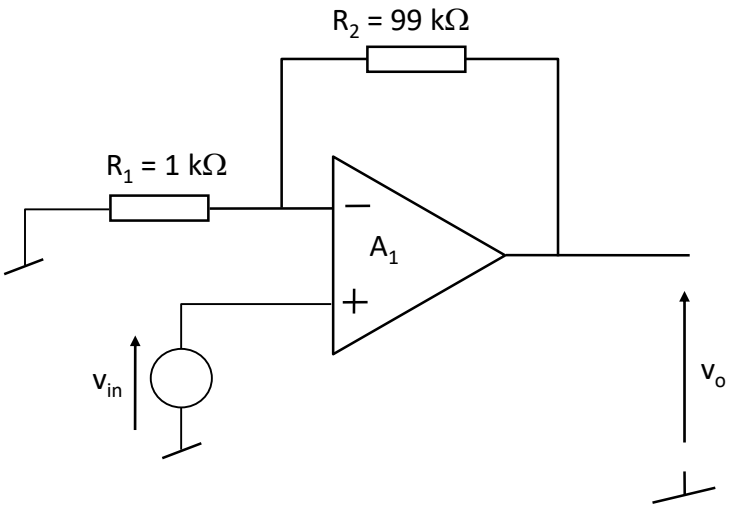

$$A_{OL}(f) = \frac{A_0}{1+j\frac{f}{f_c}}$$

$$A_0 = A_{OL}(0) = 100\ \text{dB}$$

$$f_c = 10\ \text{Hz}$$

$$A_V = \frac{v_o}{v_{in}}$$

En ikke-inverterende forstærker er opbygget som vist på diagrammet ovenfor. A_1's åbensløjfekarakteristik er som angivet.

Sp. 1 Skitsér amplitudekarakteristik for A_{OL}, $1/\beta$ samt A_V i frekvensområdet 1 Hz til 10 MHz (Bode plot).

Sp. 2 Bestem 3-dB båndbredden f_1' (kaldet f_{BCL} i lærebogen) for A_V grafisk eller ved beregning.

Sp. 3 Udled et bogstavudtryk for 3-dB båndbredden f_1' i A_V som funktion af β samt de i $A_{OL}(f)$ indgående størrelser. Evt. tilnærmelser noteres og begrundes.

Hint: Frekvensafhængigheden ligger i K_f. Den ideelle forstærkning er bestemt af α og β.

C1

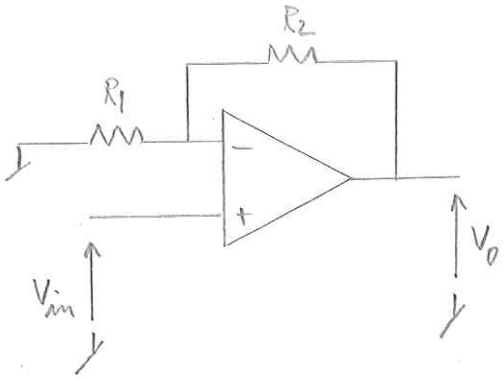

$f_t = 15\,MHz$

$$A_V = \frac{V_0}{V_{in}} = \frac{R_1 + R_2}{R_1} = \frac{1}{\beta}$$

$$\boxed{f_{3dB} = \beta \cdot f_t}$$

$$\frac{1}{\beta} = 10 \Rightarrow f_{3dB} = 0{,}10 \cdot 15 \cdot 10^6 = \underline{\underline{1{,}5\,MHz}}$$

$$\frac{1}{\beta} = 100 \Rightarrow f_{3dB} = 0{,}01 \cdot 15 \cdot 10^6 = \underline{\underline{150\,kHz}}$$

C2

$$A_{0OL} = 50.000 \doteq 94\,dB$$

$$f_{BOL} = 100\,Hz$$

$$f_t = A_{0OL} \cdot f_{BOL} = 50.000 \cdot 100 = 5\,MHz$$

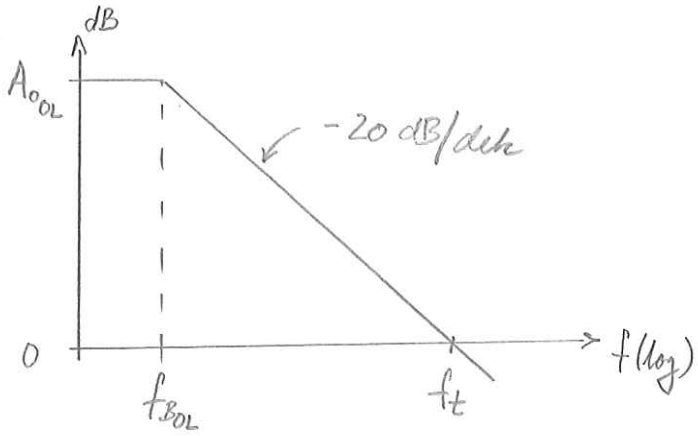

C3 $A_{0OL} = 200.000$; $f_{BOL} = 5\,Hz$; $A_{OL} = \dfrac{A_{0OL}}{1 + j\dfrac{f}{f_{BOL}}}$

$$|A_{OL}| = \frac{A_{0OL}}{\sqrt{1 + \left(\frac{f}{f_{BOL}}\right)^2}}$$

$$\varphi_{A_{OL}} = -\operatorname{Arctan}\frac{f}{f_{BOL}}$$

f [Hz]	$\lvert A_{OL}\rvert$	$\varphi_{A_{OL}}$
100	9988 ~ 80dB	$-87{,}14°$
10^3	1000 ~ 60dB	$-89{,}71°$
10^6	1 ~ 0dB	$-90°$

(C4)

To alternativer

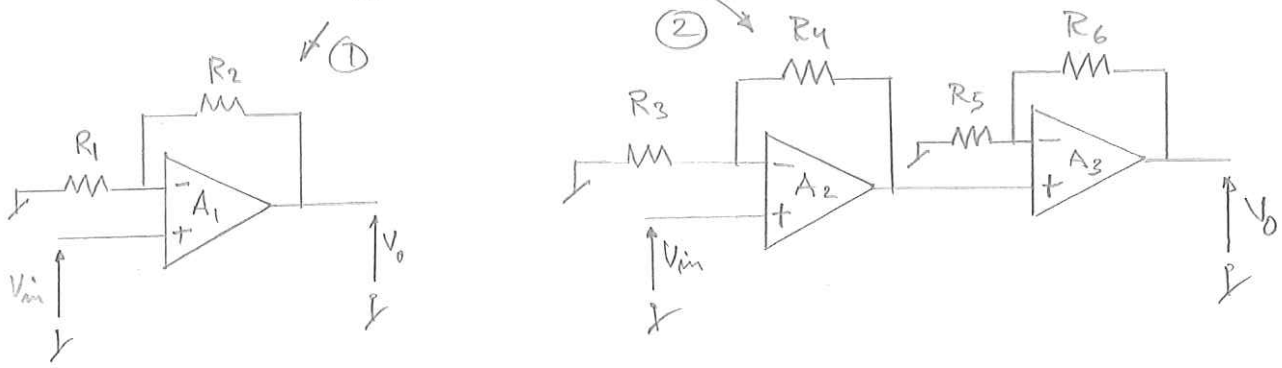

For samtlige Op Amp's gælder: $f_t = 1\,MHz$ (Unity Gain Frequency)

① Krav: $A_{0_{CL_1}} = \frac{\alpha_1}{\beta_1} = \frac{R_1+R_2}{R_1} = 100$

$$\beta_1 = \frac{R_1}{R_1+R_2} = 0{,}01 \Rightarrow f_{BCL_1} = \beta \cdot f_t = 0{,}01 \cdot 10^6 = \underline{\underline{10\,kHz}}$$

② Forstærkning fordelt på de to forstærkere giver:

$$A_{0_{CL_2}} = \frac{R_3+R_4}{R_3} = 10 \; ; \; \beta_2 = \frac{R_3}{R_3+R_4} = 0{,}1 \Rightarrow f_{BCL_2} = \beta_2 \cdot f_t = 0{,}1 \cdot 10^6 = 100\,kHz$$

$$A_{0_{CL_3}} = \frac{R_5+R_6}{R_5} = 10 \; ; \; \beta_3 = \frac{R_5}{R_5+R_6} = 0{,}1 \Rightarrow f_{BCL_3} = \beta_3 \cdot f_t = 0{,}1 \cdot 10^6 = 100\,kHz$$

Samlet for ② har vi:

$$A_V = \frac{V_o}{V_{in}} = \frac{R_3+R_4}{R_3} \cdot \frac{1}{1+j\frac{f}{f_{BCL_2}}} \cdot \frac{R_5+R_6}{R_5} \cdot \frac{1}{1+j\frac{f}{f_{BCL_3}}}$$

$A_{0_{CL_2}} = \frac{R_3+R_4}{R_3} = A_{0_{CL_3}} = \frac{R_5+R_6}{R_5}$ og $f_{BCL_2} = f_{BCL_3}$ reducerer dette til:

Samme 3 dB frekvens for de to forstærkere.

$$A_V = \left(\frac{R_3+R_4}{R_3}\right)^2 \cdot \left(\frac{1}{1+j\frac{f}{f_{BCL_2}}}\right)^2$$

$$f = f_{3dB} \Rightarrow \left|\left(\frac{1}{1+j\frac{f}{f_{BCL_2}}}\right)^2\right| = \frac{1}{\sqrt{2}} \Rightarrow \frac{1}{1+\left(\frac{f}{f_{BCL_2}}\right)^2} = \frac{1}{\sqrt{2}} \Rightarrow$$

Båndbredde

$$f = f_{BCL_2}\sqrt{\sqrt{2}-1} = 10^5 \cdot \sqrt{\sqrt{2}-1} \cong \underline{\underline{64{,}4\,kHz}}$$

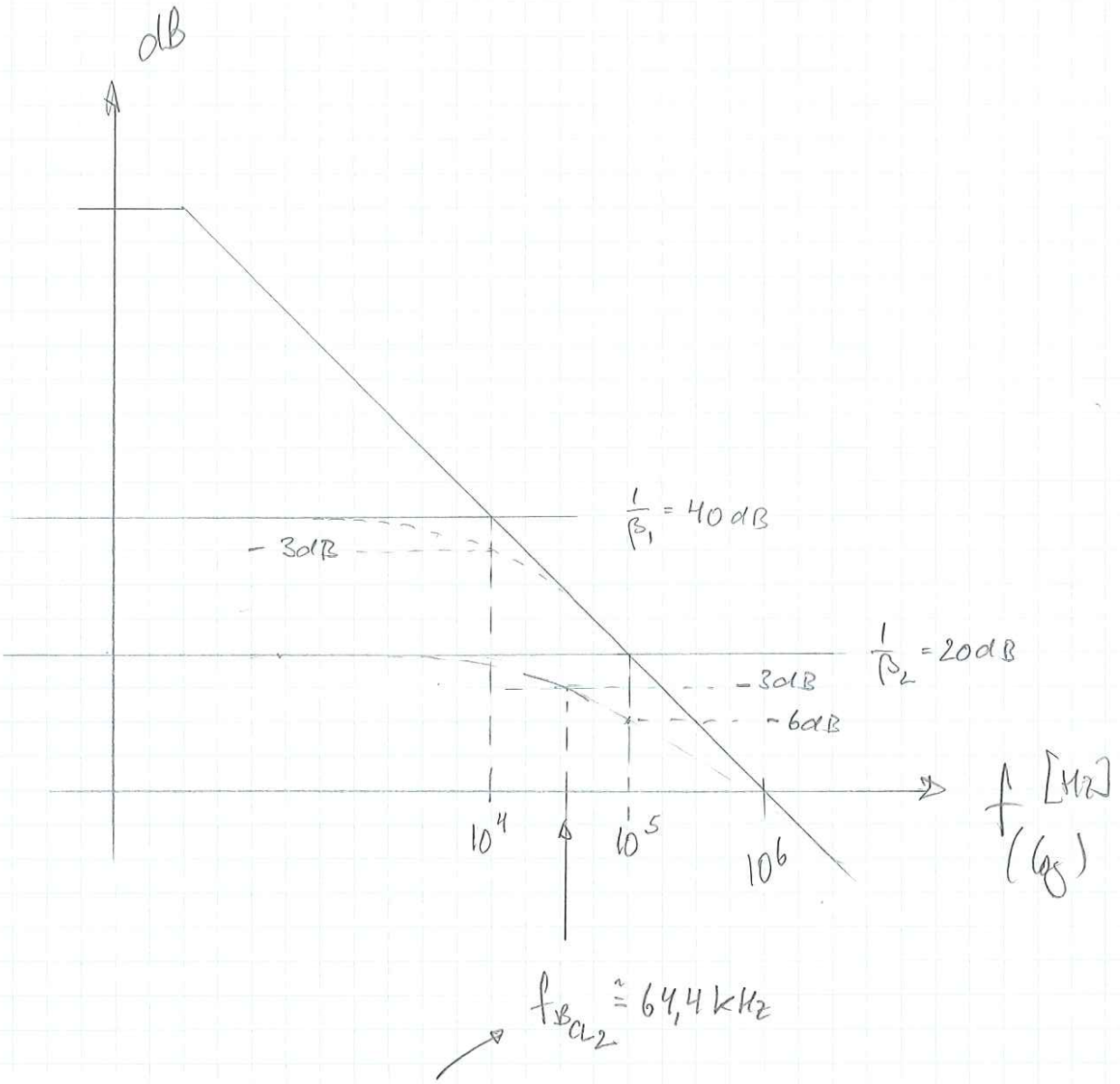

$f_{B_{CL_2}} \cong 64{,}4\,kHz$

Resultatet af to kaskadekoblede forstærkere med lav øvre 3dB-båndbredde på 100 kHz

C5

$A_{0_{OL}} = 200.000 = 94\,dB$

$f_{B_{OL}} = 5\,Hz$

$f_t = A_{0_{OL}} \cdot f_{B_{OL}} = 200.000 \cdot 5 = 1\,MHz$

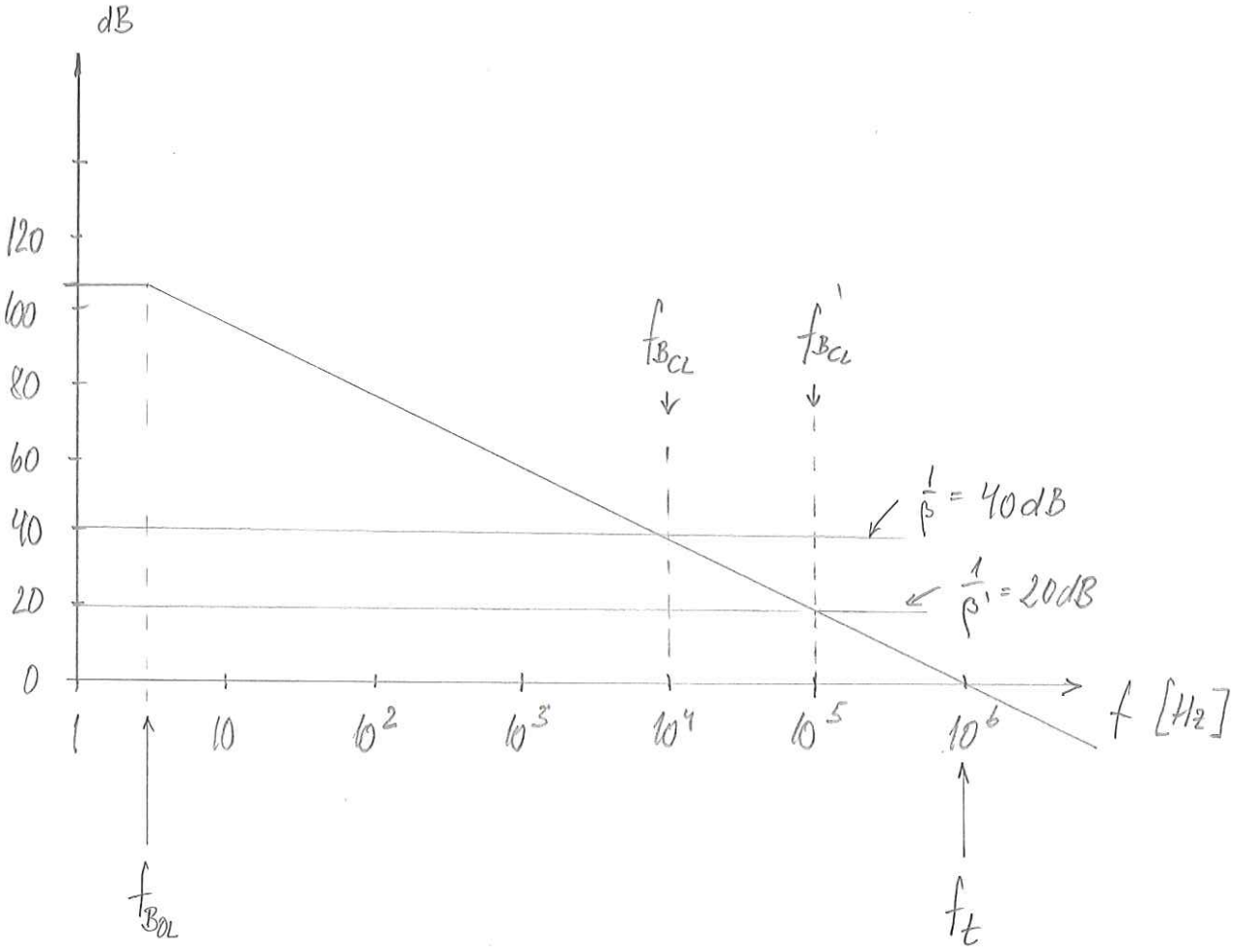

Kobled som ikke-inverterende forstærker med

$A_{0_{CL}} = \frac{1}{\beta} = 100 = 40\,dB \Rightarrow f_{B_{CL}} = \beta \cdot f_{B_{OL}} = 0{,}01 \cdot 10^6 = 10\,kHz$

$A'_{0_{CL}} = \frac{1}{\beta'} = 10 = 20\,dB \Rightarrow f'_{B_{CL}} = \beta' \cdot f_{B_{OL}} = 0{,}1 \cdot 10^6 = 100\,kHz$

C6

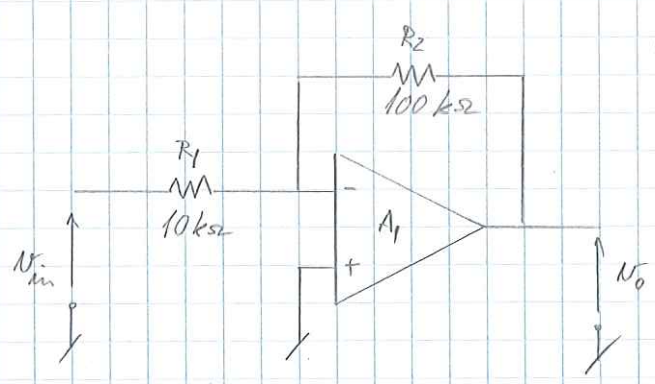

$v_{in} = 0{,}1 \cdot \sin(2\pi \cdot 5 \cdot 10^3 \cdot t)$ [V]

$K_f = 1$

Sp. 1 A_1 ideel $\Rightarrow$ $v_o = -\frac{R_2}{R_1} \cdot v_{in}$; dvs. ampl. af v_o bliver:

$$|v_o| = \left|-\frac{R_2}{R_1}\right| \cdot |v_{in}| = \frac{100}{10} \cdot 0{,}1 = \underline{\underline{1{,}0\ V}}$$

Sp. 2 A_1 ideel bortset fra: $A_{OL}(jf) = \frac{A_0}{1 + j \cdot \frac{f}{f_c}}$

$$A_0 = 100\ dB = 10^5 \quad ; \quad f_c = 10\ Hz$$

Fejlen ligger i feedbaktoren $K_f = \frac{1}{1 + \frac{1}{\beta A_{OL}}}$

$$\left.\begin{aligned} f = 5kHz \gg f_c \Rightarrow A_{OL} &\cong \frac{A_0}{j\frac{f}{f_c}} = -j\frac{A_0 \cdot f_c}{f} \\ \beta = \frac{R_1}{R_1 + R_2} &= \frac{10}{10 + 100} = \frac{1}{11} \cong 0{,}0909 \end{aligned}\right\} \Rightarrow$$

$$K_f \cong \frac{1}{1 + \frac{1}{\beta\left(-j\frac{A_0 f_c}{f}\right)}} = \frac{1}{1 + j\frac{f}{\beta A_0 f_c}} \Rightarrow$$

$$|K_f| = \frac{1}{\sqrt{1 + \left(\frac{f}{\beta A_0 f_c}\right)^2}} = \frac{1}{\sqrt{1 + \left(\frac{5 \cdot 10^3}{0{,}0909 \cdot 10^5 \cdot 10}\right)^2}} = 0{,}99849$$

$$\text{Fejl} = 1 - |K_f| = 1 - 0{,}99849 = 0{,}15091 \cdot 10^{-2} \cong \underline{\underline{0{,}15\%}}$$

C7

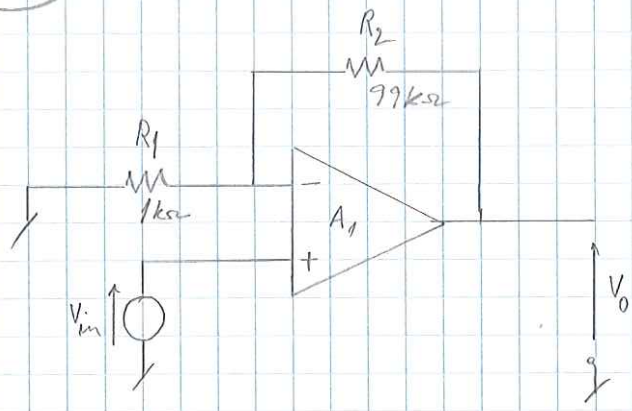

$$A_{OL}(jf) = \frac{A_0}{1 + j\frac{f}{f_c}}$$

$A_0 = A_{OL}(0) = 100\,dB = 10^5$

$f_c = 10\,Hz$

Sp.1 $\beta = \frac{R_1}{R_1 + R_2} = \frac{1}{1+99} = \frac{1}{100} \Rightarrow \frac{1}{\beta} = 100 = 40\,dB$

Først tegner $|A_{OL}|$ og $|\frac{1}{\beta}|$. Herefter vurderer $|A_V|$.

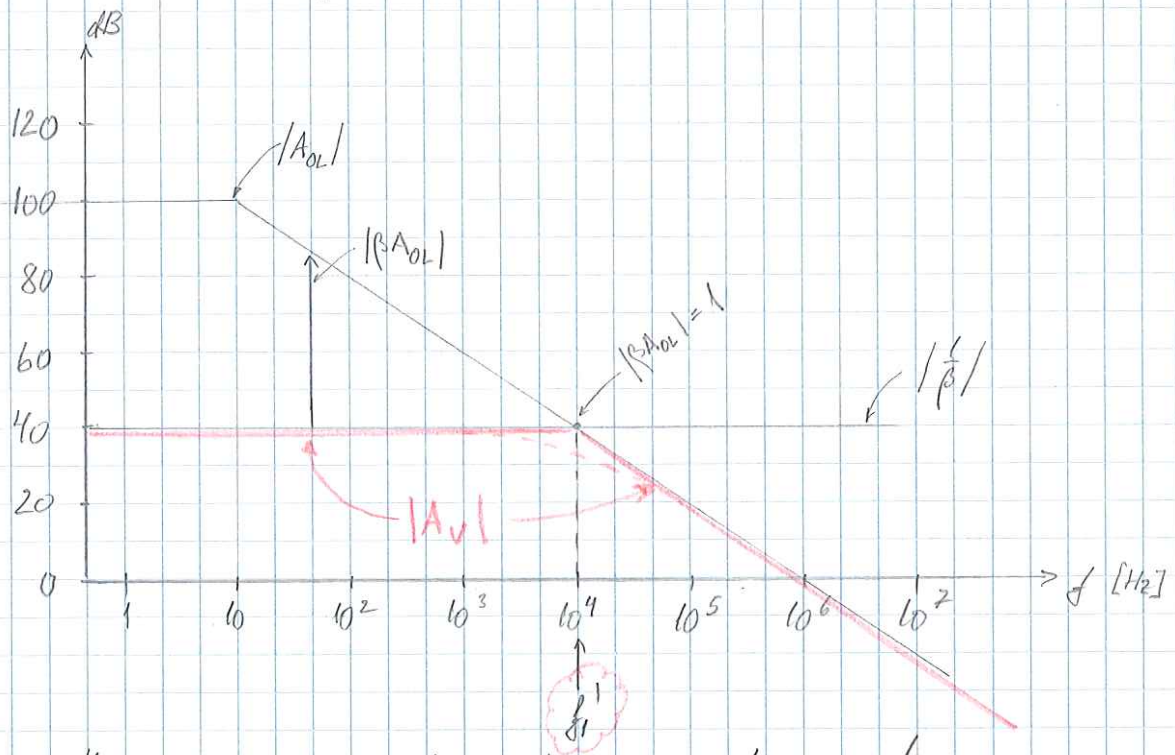

$$A_V = \frac{V_0}{V_{in}} = \frac{\alpha}{\beta} \cdot k_f = \frac{1}{\beta} \cdot k_f \Big|_{\alpha=-1} = \frac{1}{\beta} \cdot \frac{1}{1 + \frac{1}{\beta A_{OL}}}$$

$\beta \cdot A_{OL}$ bestemmer afvigelse fra ideelle forhold

$f \ll f_1' \Rightarrow |\beta A_{OL}| \gg 1 \Rightarrow K_f \doteq 1 \Rightarrow A_V \doteq \frac{1}{\beta}$ ← (A_V follger $\frac{1}{\beta}$-kurve)

$f \gg f_1' \Rightarrow |\beta \cdot A_{OL}| \ll 1 \Rightarrow K_f \doteq \frac{1}{1/\beta A_{OL}} = \beta \cdot A_{OL} \Rightarrow A_V \doteq \frac{1}{\beta} \cdot \beta \cdot A_{OL} = A_{OL}$ ← (A_V follger A_{OL}-kurve)

$$f = f_1' \Rightarrow \left.\begin{array}{l} |\beta A_{OL}| = 1 \\ \varphi_{\beta A_{OL}} = -90^\circ \end{array}\right\} \Rightarrow \beta A_{OL} = -j \Rightarrow$$

$$A_V = \frac{1}{\beta} \cdot \frac{1}{1 + \frac{1}{-j}} = \frac{1}{\beta} \cdot \frac{1}{1+j} \Rightarrow |A_V| = \frac{1}{\beta} \cdot \frac{1}{\sqrt{2}}$$

$20 \log\left(\frac{1}{\sqrt{2}}\right) = -3\,dB$

Sp. 2 Jf. ovenstående er 3-dB båndbredden for A_V lig

$f_1' =$ (afleset) **10kHz**

Sp. 3 Generelt: $A_V = \frac{1}{\beta} \cdot K_f$ ← f-afh. ligger i denne

ideel forst.

3-dB båndbredden må altså ligge, hvor $|K_f|$ er faldet 3dB, dvs.

$$|K_f| = \frac{1}{\sqrt{2}}$$

$$A_{OL}(jf) = \frac{A_0}{1 + j\frac{f}{f_c}} \doteq \left.\frac{A_0}{j\frac{f}{f_c}}\right|_{f \gg f_c} = -j\frac{A_0 f_c}{f} \Rightarrow$$

$$K_f = \frac{1}{1 + \frac{1}{\beta A_{OL}}} = \frac{1}{1 + \frac{1}{\beta \cdot \left(-j\frac{A_0 f_c}{f}\right)}} = \frac{1}{1 + j\frac{f}{\beta A_0 f_c}}$$

$$|K_f| = \frac{1}{\sqrt{2}} \Rightarrow \frac{f}{\beta A_0 f_c} = 1 \Rightarrow f = \beta \cdot A_0 f_c = \beta f_1$$

(Unity Gain frekvens)

$(\Rightarrow f = f_1' = f_{3dB})$

f_1': 3dB frekvens for A_V